HeBlad BV
Diamantweg 22
NL - 5527 LC Hapert
T. +31 497 - 36 08 08
info@HeBlad.com
www.HeBlad.com

Checkers/Drafts Table Anthracite-Concrete (2P)

Product code: GT.CK.AB2

Slim, subtle but sturdy. This checkers table in anthracite concrete is made for two people. The table is equipped with an integrated checkers game and you will receive the necessary set of checkers free of charge. Because the height of the table is 75 cm, it is perfectly matched to the height of the seats of 50 cm. These are standard seat and table heights, so you can sit comfortably to play checkers or just have a chat. Would you rather play chess than checkers? This checkers table can also be ordered as an anthracite concrete chess table for 2 persons. Don't forget to check out HeBlad's other gaming tables and benches.

Checkers table for 2 or 4 persons

If you have the space or would prefer to have four seats around the table, then the anthracite concrete checkers table for 4 people is perfect for your location. This has the same beautiful anthracite colour, but has four seating options. The corresponding bottom plate for the checkers and chess tables is adapted to the surface of the table with seats. Take this into account when determining whether a 4-person checkers table is suitable for your site. Both the 2-person and 4-person tables are available in natural concrete. The checkers table natural concrete for 2 persons is, as the name suggests, made of concrete and is of the same high quality as the anthracite version.

Combine the checkers table with other game tables
Because HeBlad products are known for their strength and retention of their beautiful appearance, you can confidently combine existing HeBlad products with new ones. For example, do you already have a HeBlad ping pong table on your property? Then a completely new checkers table would not look out of place next

HeBlad BV
Diamantweg 22
NL - 5527 LC Hapert
T. +31 497 - 36 08 08
info@HeBlad.com
www.HeBlad.com

to this ping pong table. All products are cast from concrete and are insensitive to extreme weather conditions and vandalism. Do you want to expand your game tables with a nice picnic set or do you want to install a concrete bench as an extension to your foot volleyball table? If you have the space, nothing should hold you back. Contact us and we will discuss your options.

HeBlad BV
Diamantweg 22
NL - 5527 LC Hapert
T. +31 497 - 36 08 08
info@HeBlad.com
www.HeBlad.com

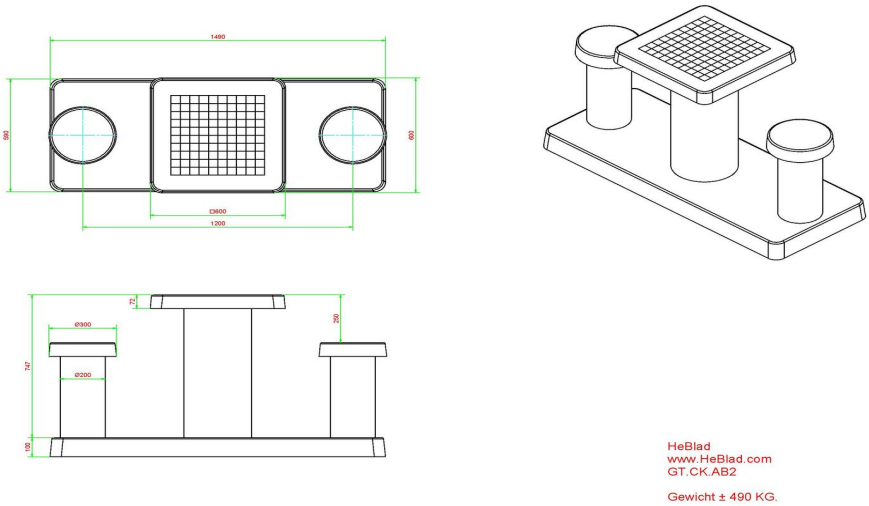

Specifications Checkers/Drafts Table Anthracite-Concrete (2P)

Product code	GT.CK.AB2	Tabletop thickness	7 cm
Colour	Anthracite concrete	Height tabletop	75 cm
Dimensions (L x W x H)	149 x 59 x 85 cm	Seat height	50 cm
Dimensions tabletop (L x W)	60 x 60 cm	Dimensions base plate (L x W x H)	120 x 60 x 10 cm
Game dimentions	41,5 x 41,5 cm	Weight	425 kg

Related products

GT.CK.2

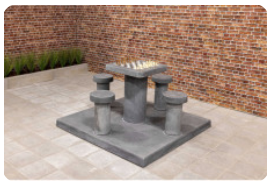
GT.CH.AB4

BB.CK

GT.CK.Pieces

PS.DL.GT.132