HeBlad BV
Diamantweg 22
NL - 5527 LC Hapert
T. +31 497 - 36 08 08
info@HeBlad.com
www.HeBlad.com



Bench standard oval anthracite-concrete

Product code: BB.STAB.OV

Use this oval concrete bench in anthracite concrete colour as seating or as security against ram raids. Thanks to its robustness, this bench won't look out of place anywhere. The concrete bench with an oval shape is a beautiful addition to the garden, park, city center or parking lot. This bench is ideal to provide seating for passers-by, but also to prevent burglary or to separate part of your location.

Oval bench made of concrete is a practical, playful addition

A sturdy seat and robust appearance make this concrete bench a solid place to seat four people. A pleasant gathering in a comfortable sitting position. Because the bench is cast in anthracite-coloured concrete, the colour can be seen in the entire bench.

Combine concrete bench with other outdoor benches and game tables

Because HeBlad products are specifically designed for outdoor use, this concrete bench for public spaces can be perfectly combined with HeBlad's game tables, other benches and picnic sets. For example, create a circular shape with several concrete oval benches in the same colour or in natural concrete or anthracite lacquered colour. You could also give your location an extra dimension by installing a foot volleyball table, table football table or concrete ping-pong table, so that the concrete bench is a resting place for viewers or resting athletes.

Delivery concrete bench

HeBlad produces all products in our own factory, which is why we almost always

HeBlad
concrete urban furniture

HeBlad BV
Diamantweg 22
NL - 5527 LC Hapert
T. +31 497 - 36 08 08
info@HeBlad.com
www.HeBlad.com

deliver from stock. We have a delivery time of 0 to 4 working weeks in the Netherlands. This may be different in the UK, so be sure to consult the terms and conditions of delivery or contact us for a delivery date.
Due to the weight of the concrete bench, it is delivered via the loading/unloading crane on our truck. It is important that our driver can get the truck close to the place where the concrete bench will be placed.
Always contact HeBlad for the terms and conditions of delivery. We will then discuss the method of delivery, which will prevent any unpleasant surprises. We make every effort to deliver to your satisfaction and will advise you, for example, whether a concrete base plate is advisable in your case.

HeBlad BV
Diamantweg 22
NL - 5527 LC Hapert
T. +31 497 - 36 08 08
info@HeBlad.com
www.HeBlad.com

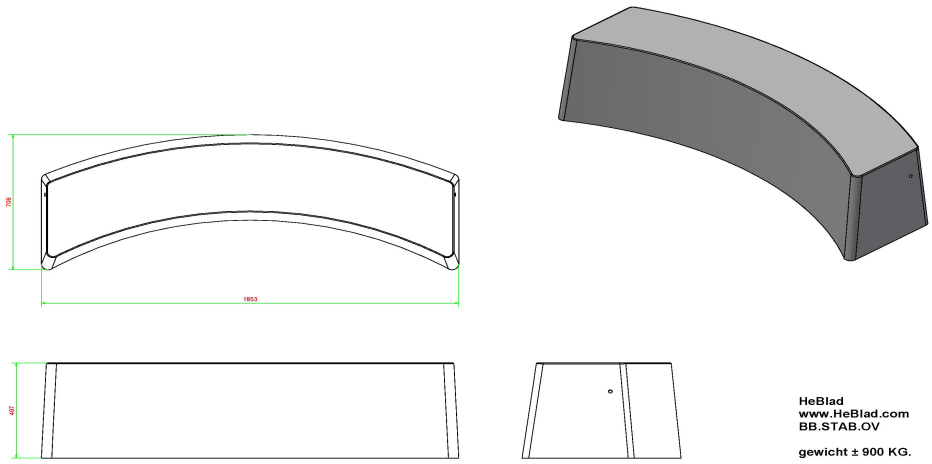

Specifications Bench standard oval anthracite-concrete

Product code	BB.STAB.OV	Material seat	Concrete
Colour	Anthracite concrete	Number of seats	4
Dimensions (L x W x H)	185 x 70 x 50 cm	Weight	900 kg
Seat height	50 cm		

Related products


BB.DLA.OV


PS.ST.OV


BB.ST


BB.ST.A


BB.ST.AB