HeBlad BV
Diamantweg 22
NL - 5527 LC Hapert
T. +31 497 - 36 08 08
info@HeBlad.com
www.HeBlad.com



Picnic table Standard Anthracite-Concrete Wheelchair accessible

Product code: PS.STAB.RT

How beautiful is this anthracite concrete picnic table that also accommodates a wheelchair? At the head of the table, a wheelchair user can easily take a place. Because the tabletop has been extended and raised, the wheelchair user does not have to sit next to the table, but can simply join in.

Concrete picnic set with special dimensions for wheelchairs

By extending the tabletop on one side and adjusting the height of the tabletop, space has been created for a wheelchair user to join. The seat height of the accompanying benches has also been adjusted, so all users of the picnic table sit at the same height. The seat height is also perfect in relation to the height of the tabletop. This standard anthracite-concrete picnic set is wheelchair accessible and comfortable for every user.

HeBlad Picnic set: robust, beautiful and wheelchair-friendly

This solid, sturdy version of the wheelchair-accessible picnic set is made of coloured concrete. The anthracite concrete version shows off the concrete appearance very nicely, a natural variation on the natural concrete version of this picnic table. The concrete look is even retained in case of damage, because the set is made of coloured concrete. The colour was not created by painting the set, but by colouring the concrete itself. This picnic set can also be supplied in standard anthracite, the colour anthracite without the concrete look.

Brighten up every square and park with game tables, picnic sets and benches from HeBlad

HeBlad BV
Diamantweg 22
NL - 5527 LC Hapert
T. +31 497 - 36 08 08
info@HeBlad.com
www.HeBlad.com

HeBlad's game tables, benches and picnic sets adorn playgrounds, city centers, gardens and parks. For example, combine this beautiful picnic set standard anthracite-concrete wheelchair accessible with a trendy foot volleyball table or one of the sturdy concrete benches from HeBlad. We manage production in our own factory and also take care of delivery. So, you've come to the right place to decorate your square, garden or park.
Please feel free to contact us, we will be happy to discuss the possibilities.

*The base plate is optional

HeBlad BV
Diamantweg 22
NL - 5527 LC Hapert
T. +31 497 - 36 08 08
info@HeBlad.com
www.HeBlad.com

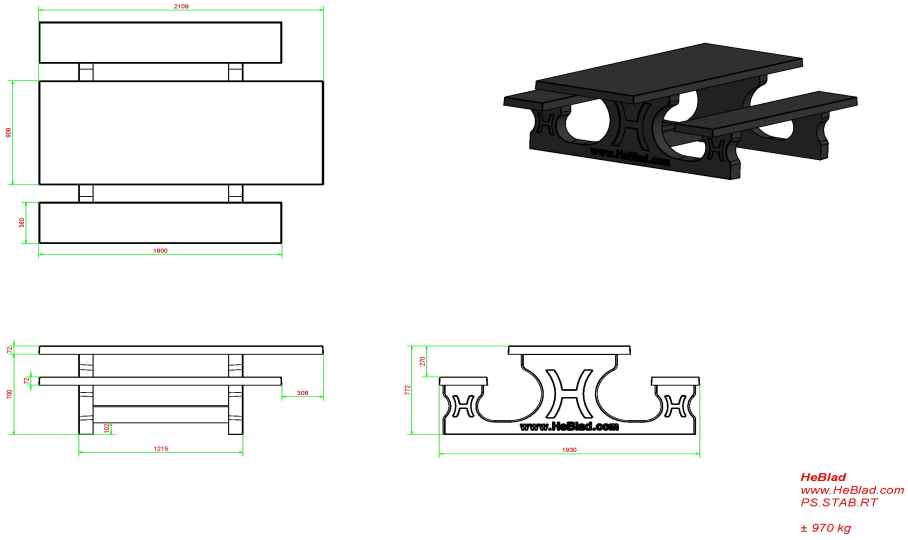

Specifications Picnic table Standard Anthracite-Concrete Wheelchair accessible

Product code	PS.STAB.RT	Seat height	50 cm
Colour	Anthracite concrete	Material seat	Concrete
Dimensions (L x W x H)	210 x 187 x 77 cm	Distance legs	111 cm (center to center)
Dimensions tabletop (L x W)	210 x 90 cm	Weight	970 kg
Tabletop thickness	7 cm	Number of seats	7
Height tabletop	77 cm		

Related products


PS.ST.RT


PS.DLAB.RT


OP.PP.AB